UF15P(C) Series

Size : 172 x 150 x 51
Unit : mm

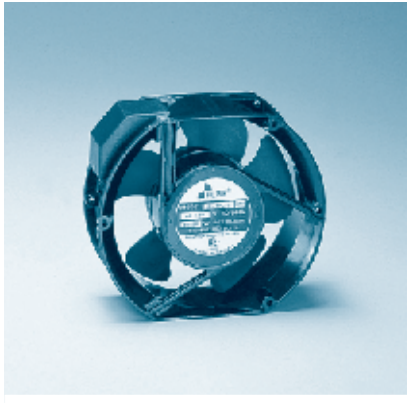

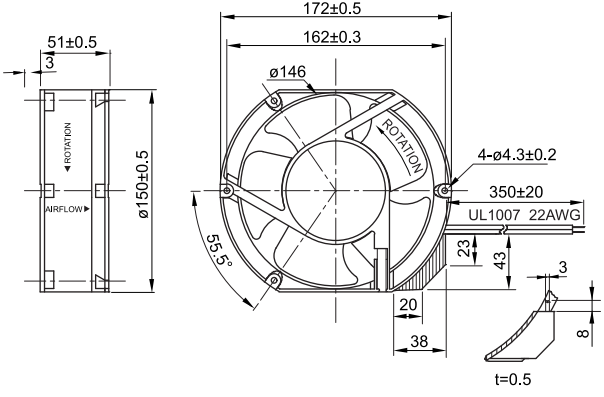

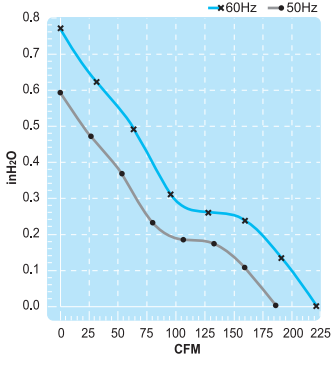

Thermal Protection

Terminal or Lead Wire Type

E136370 E136370

Spec. / Model	Rated Voltage V	Frequency Hz	Input Power W	Rated Current A	Locked Current A	Speed RPM	Maximum Air Flow m³/min.	Maximum Air Flow CFM	Maximum Pressure mmH₂O	Maximum Pressure InchH₂O	Noise dB	Weight kg
UF15PC10-H	100V	50	30	0.33	0.50	2850	5.8	205	16	0.63	50	0.9
		60	30	0.29	0.52	3400	6.4	226	20	0.79	55	
UF15PC11-H	115V	50	31	0.26	0.41	2850	5.8	205	16	0.63	53	0.9
		60	31	0.25	0.43	3400	6.4	226	20	0.79	58	
UF15PC20-H	200V	50	29	0.15	0.23	2850	5.8	205	16	0.63	53	0.9
		60	29	0.14	0.25	3400	6.4	226	20	0.79	58	
UF15PC23-H	230V	50	29	0.12	0.19	2850	5.8	205	16	0.63	53	0.9
		60	29	0.12	0.19	3400	6.4	226	20	0.79	58	
UF15PC11-L	115V	50	31	0.17	0.21	1400	2.5	88	3.8	0.15	31	0.9
		60	31	0.15	0.20	1700	3.0	106	5.5	0.22	37	
UF15PC23-L	230V	50	29	0.08	0.09	1400	2.5	88	3.8	0.15	31	0.9
		60	29	0.07	0.09	1700	3.0	106	5.5	0.22	37	