UF15P Series

Size : 172 x 150 x 51
Unit : mm

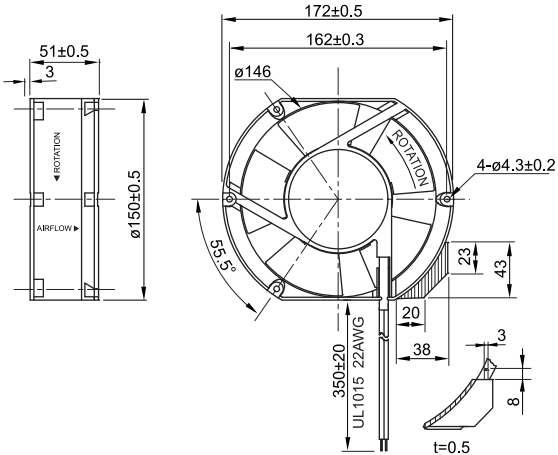

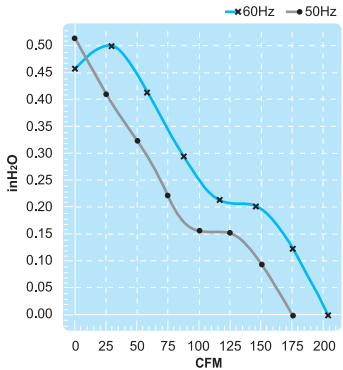

Impedance Protection

Terminal or Lead Wire Type

E136370 E136370

Spec. / Model	Rated Voltage V	Frequency Hz	Input Power W	Rated Current A	Locked Current A	Speed RPM	Maximum Air Flow m^3/min.	Maximum Air Flow CFM	Maximum Pressure mmH_2O	Maximum Pressure $InchH_2O$	Noise dB	Weight kg
UF15P11-H	115V	50	32	0.43	0.51	2750	4.8	170	10.5	0.42	50	0.9
		60	28	0.36	0.45	3100	5.5	195	9.5	0.38	55	
UF15P23-H	230V	50	35	0.23	0.29	2750	4.8	170	10.5	0.42	50	0.9
		60	30	0.18	0.25	3100	5.5	195	9.5	0.38	55	